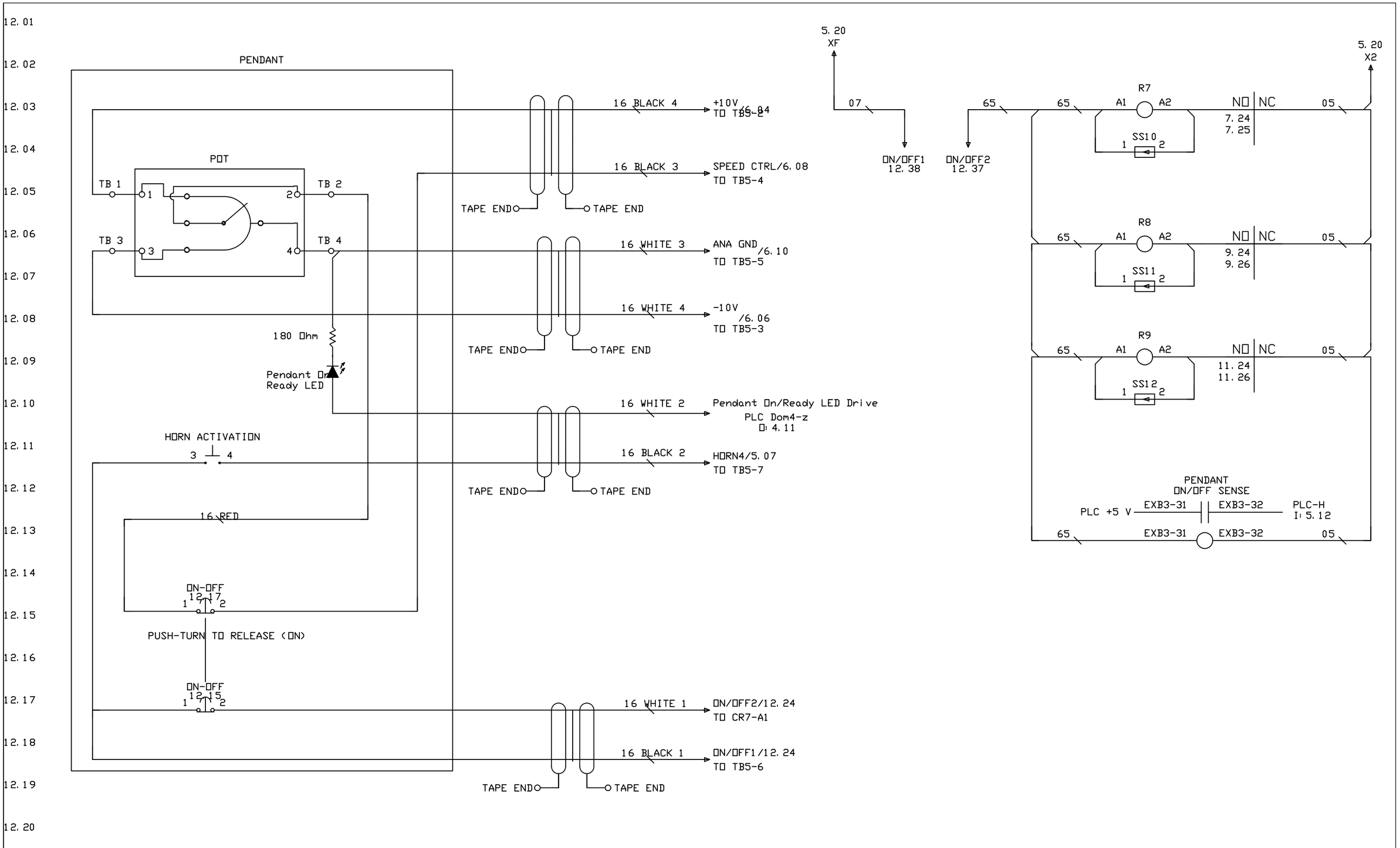

MATL:					
REV:	C				
VR420-BC6	SCALE:	BY: GNM	REVISED: 06-15-2011	BALDOR ELECTRIC Co./CFHT Corp.	Pg: 12
	FILE:		TDR: 580028	ELECTRICAL SCHEMATIC-PENDANT	