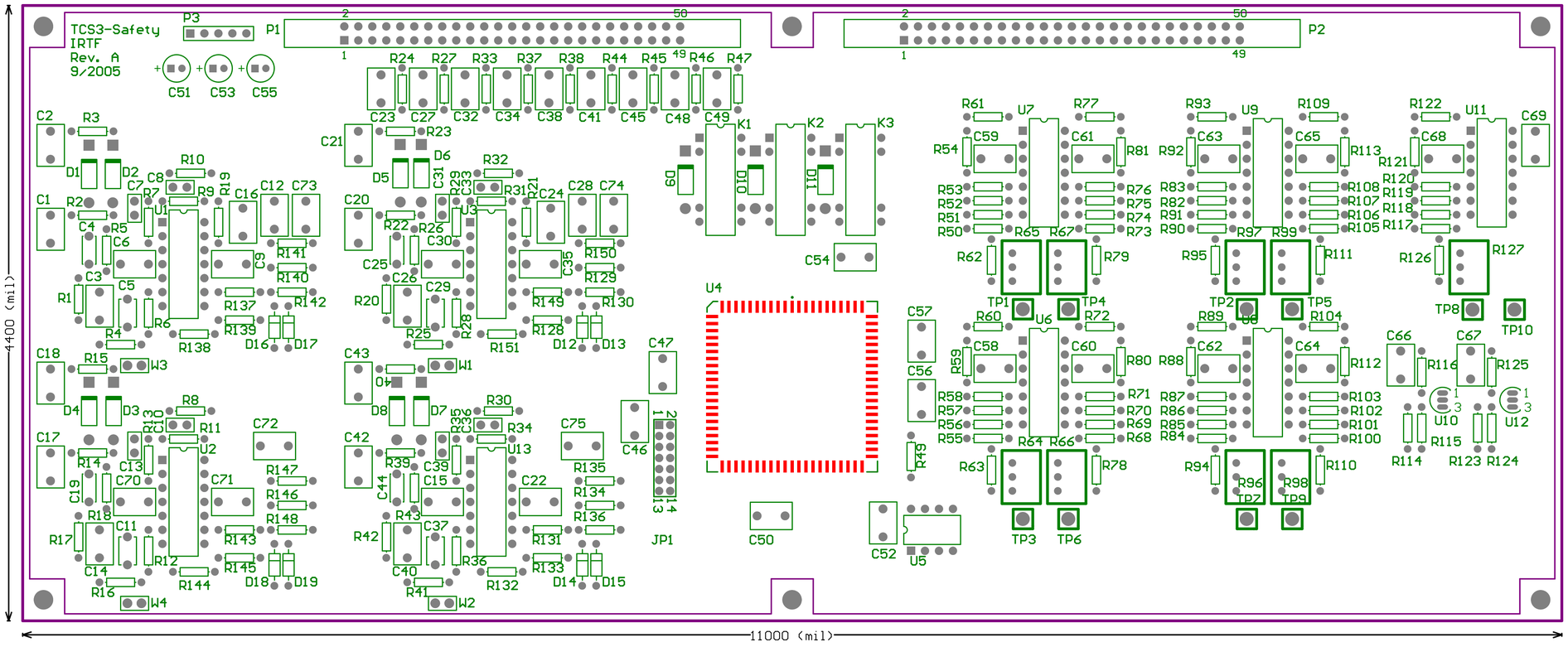

Layer Stack Up Detail for: Safety.PCBDOC

Layer Name
Top Layer
Grounds
+5V
Bottom Layer

ENGINEER: Fred Keske	TITLE: Safety		
DATE: 9/22/2005			
FILE NAME: Safety.PCBDOC	PART NO.: TCS3-Safety	REV: -	SCALE: SCALE: 0.75