MANUFACTURING NOTES: SHEET 10

BILL OF MATERIAL				
ITEM	Q'TY	DRW. NO.	DESCRIPTION	MATERIAL

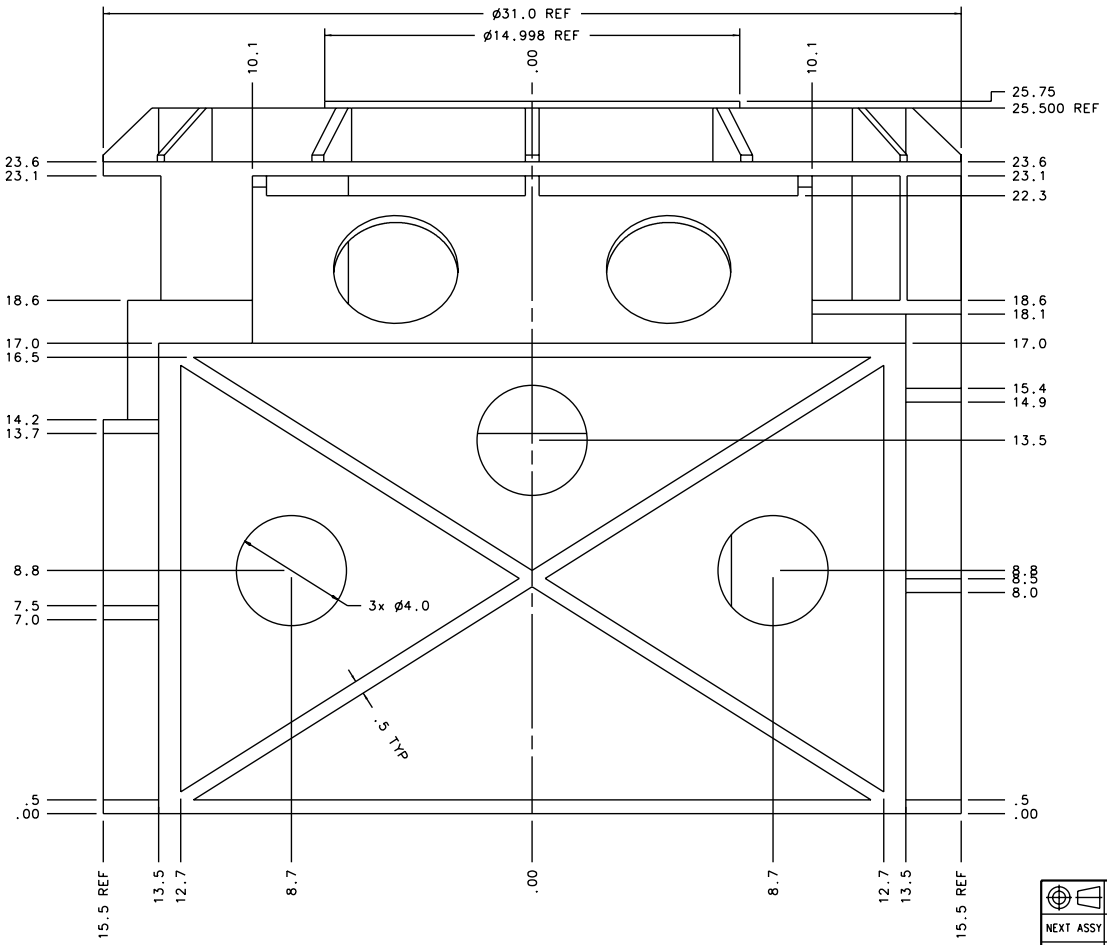

BACK

	TOLERANCES UNLESS OTHERWISE NOTED	DRAWING NUMBER AOK-301-3		INSTITUTE FOR ASTRONOMY 2680 WOODLAWN DR. HONOLULU, HI 96822
NEXT ASSY	X.X ±0.02	DATE: 08/21/01	NAME: AO-SPOOL FEA VERSION	
N/A	X.XX ±0.005	DESIGN: VERN S	INSTRUMENT: TELESCOPE: TELESCOPE	
	X.XXX ±0.001	JOS #: JOS_NO	SIZE: B	REVISION DATE: 10/24/01
	∠ ±0.5°	MFG:	SCALE: 1:4	SHEET NO. 3 OF 10