Item	Qty	Part #	Name
5	1	AOK-300	Support Structure
4	1	AOK-200	Optic Mounts
3	1	AOK-100	Gimbal Mount Pickoff Mirror
2	1	AOE-100	Filter Wheel
1	1	AOK-400	Acquisition Camera Support Frame

BILL OF MATERIAL

ITEM	Q'TY	DRW. NO.	DESCRIPTION	MATERIAL

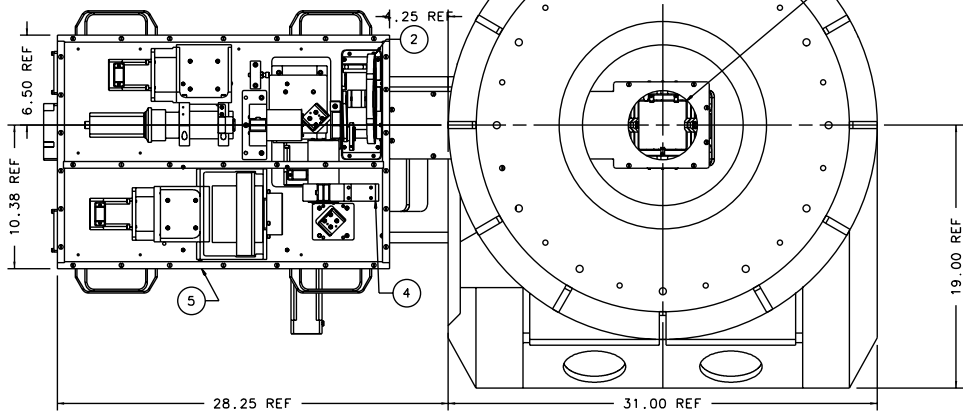

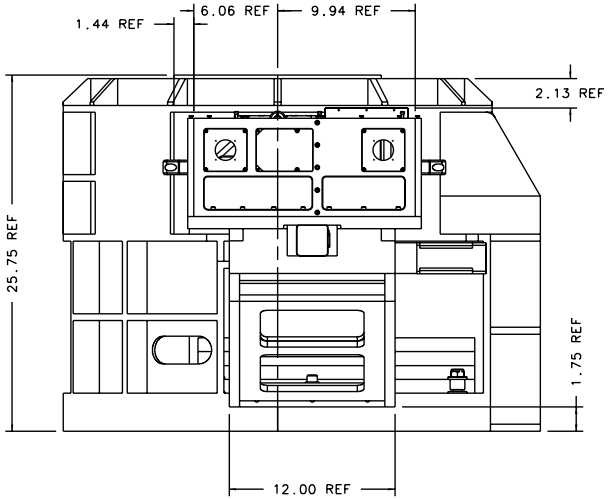

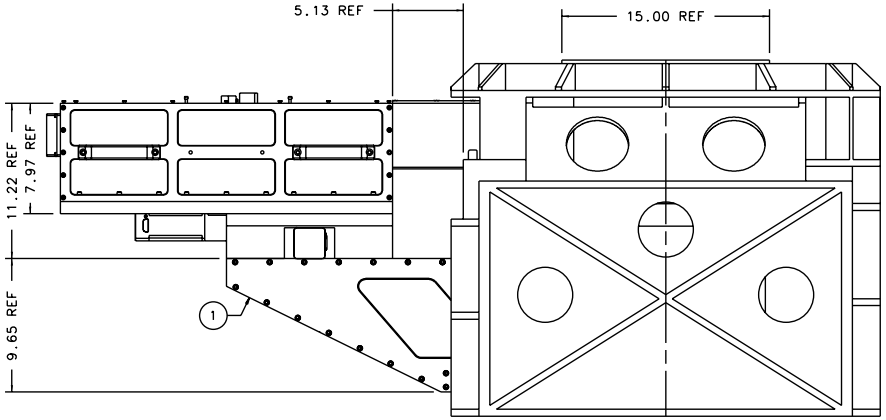

	TOLERANCES UNLESS OTHERWISE NOTED	DRAWING NUMBER AOK-000-1		INSTITUTE FOR ASTRONOMY 2680 WOODLAWN DR. HONOLULU, HI 96822
NEXT ASSY	X.X ±0.02	DATE: 05/14/02	NAME: AO ACQUISITION CAMERA INSTRUMENT: IRTF AO TELESCOPE: NASA IRTF	
AOO-000	X.XX ±0.005	DESIGN: VERN S		
	X.XXX ±0.001	JOS #: 948	SIZE: B	REVISION DATE: REV_DATE
	∠ ±0.5°	MFG:	SCALE: 1:8	SHEET NO. 1 OF 2