WEIGHT: 0.71 LBS
ANODIZE: BLACK
SURF AREA: 51.26 IN^2

BILL OF MATERIAL				
ITEM	Q'TY	DRW. NO.	DESCRIPTION	MATERIAL
1	1	AOK-271	LENS CELL2	ALUM 6061-T6

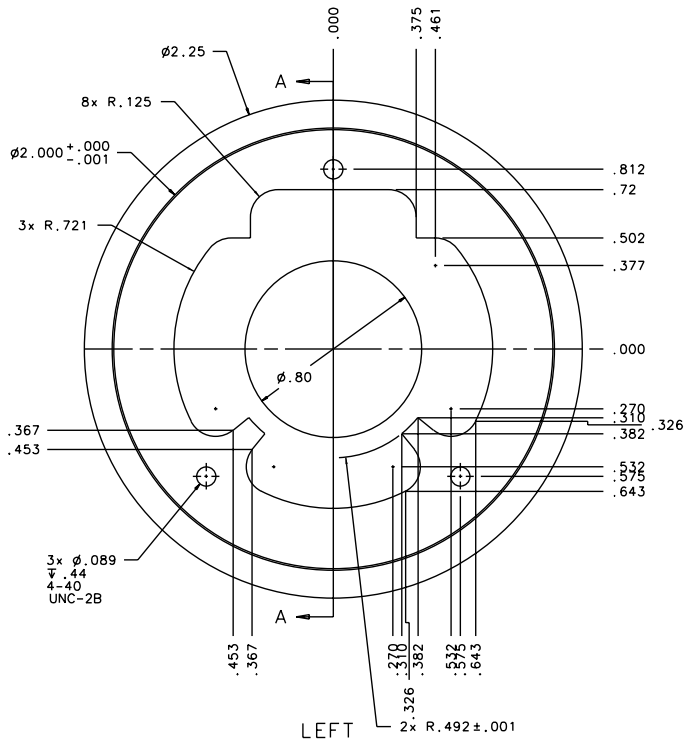

LEFT

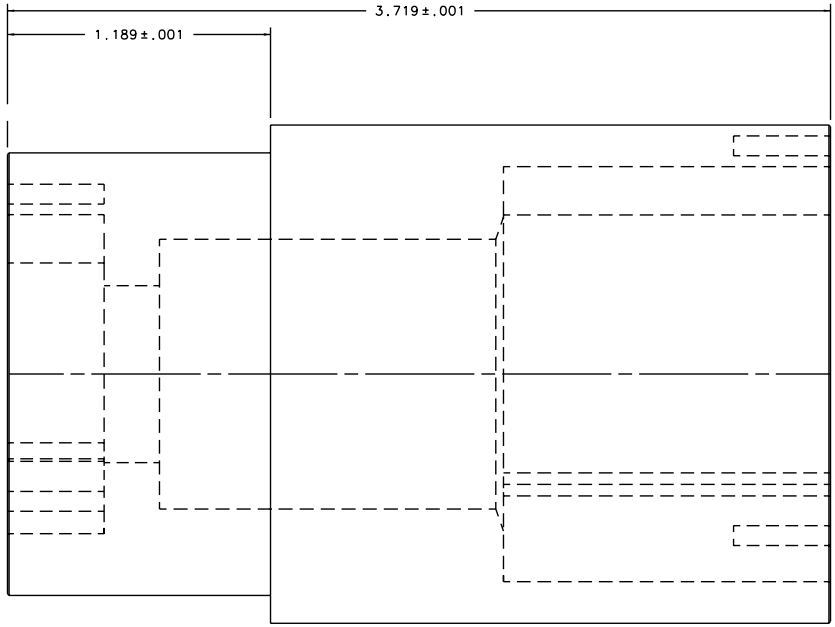

FRONT

	TOLERANCES UNLESS OTHERWISE NOTED	DRAWING NUMBER AOK-271-1		INSTITUTE FOR ASTRONOMY 2680 WOODLAWN DR. HONOLULU, HI 96822
NEXT ASSY	X.X ±0.02	DATE: 01/28/02	NAME: LENS CELL2	
AOK-270	X.XX ±0.005	DESIGN: VERN S	INSTRUMENT: IRTF AO TELESCOPE: NASA IRTF	
	X.XXX ±0.001	JOS #: 948	SIZE: B	REVISION DATE: REV_DATE
	∠ ±0.5°	MFG:	SCALE: 2:1	SHEET NO. 1 OF 2