WEIGHT: 0.02 LBS
ANODIZE: BLACK
SURF AREA: 4.72 IN^2

BILL OF MATERIAL

ITEM	Q'TY	DRW. NO.	DESCRIPTION	MATERIAL
1	1	AOK-114	SPRING BLOCK	ALUM 6061-T6

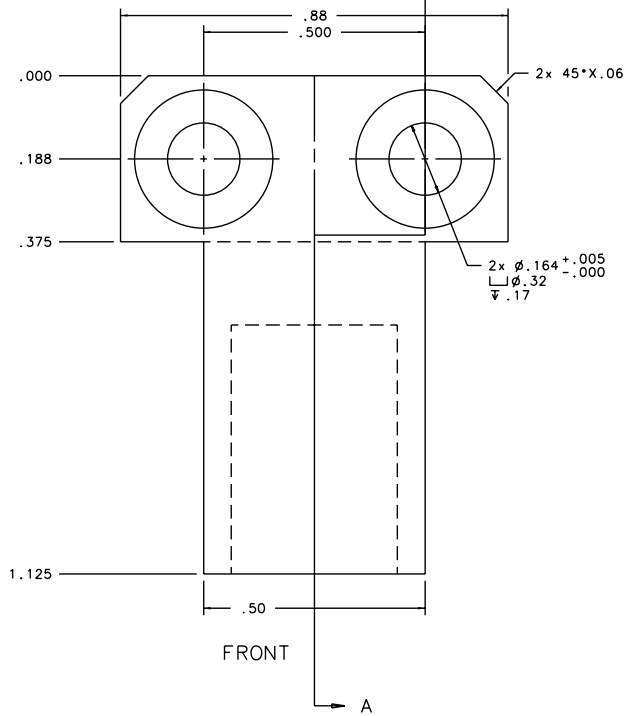

FRONT

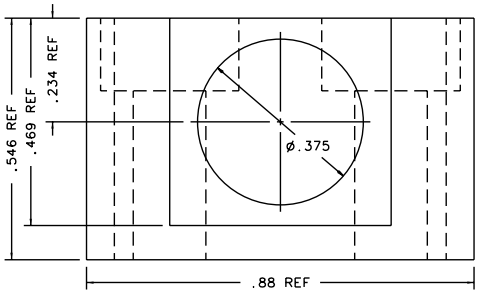

BOTTOM

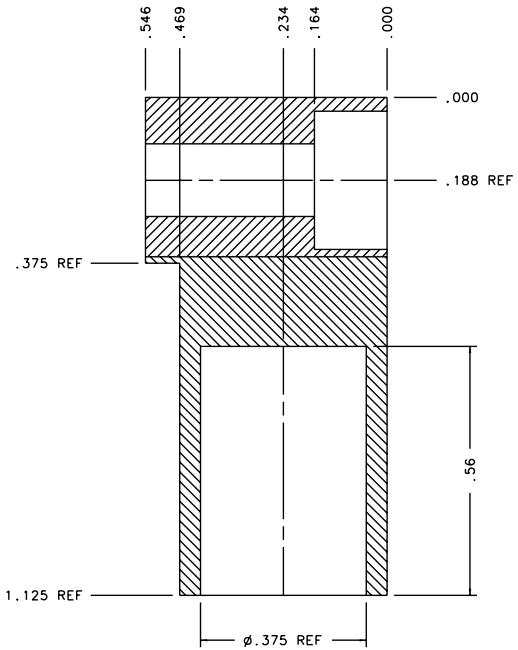

SECTION A-A

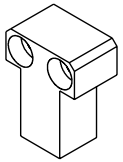

ISO:SCALE FULL

	TOLERANCES UNLESS OTHERWISE NOTED	DRAWING NUMBER AOK-114		INSTITUTE FOR ASTRONOMY 2680 WOODLAWN DR. HONOLULU, HI 96822
NEXT ASSY	X.X ±0.02	DATE: 12/26/01	NAME: SPRING BLOCK INSTRUMENT: IRTFF AO TELESCOPE: NASA IRTF	
NEXT ASSY	X.XX ±0.005	DESIGN: VERN S		
	X.XXX ±0.001	JOS #: 948	SIZE: B	REVISION DATE: REV_DATE
	∠ ±0.5°	MFG:	SCALE: 4:1	SHEET NO. 1 OF 1