MANUFACTURING NOTES: SHEET 10

| BILL OF MATERIAL | | | | |
|---|---|---|---|---|
| ITEM | Q'TY | DRW. NO. | DESCRIPTION | MATERIAL |

M=MACHINING AFTER WELDING/STRESS RELIEVE

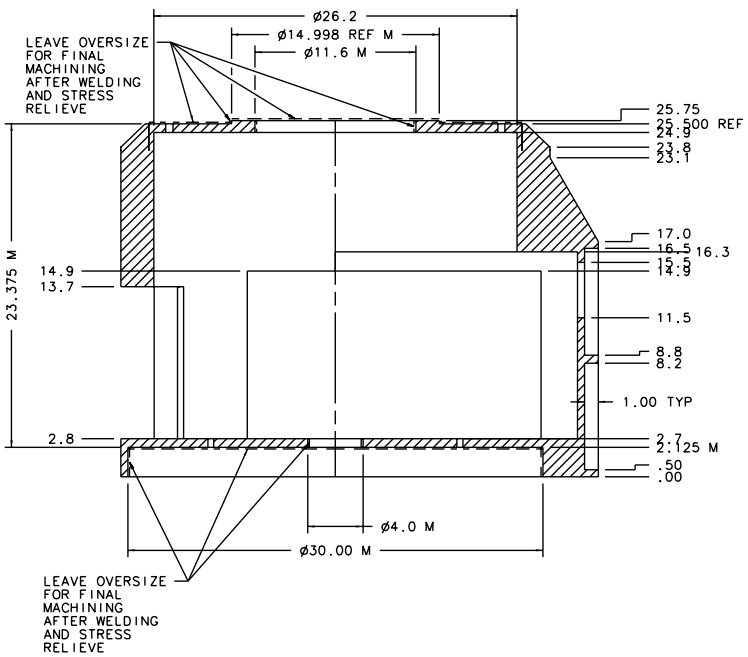


SECTION A-A:SCALE 1:8

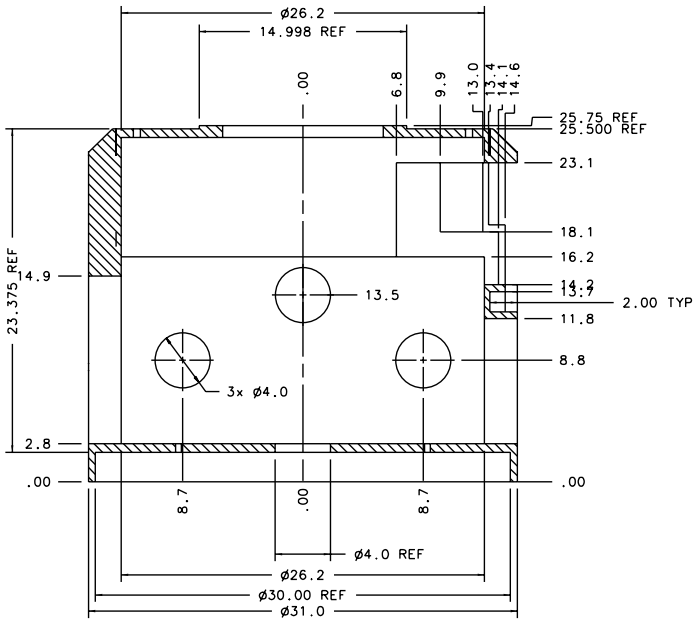


SECTION B-B:SCALE 1:8

| | | | | |
|---|---|---|---|---|
| | TOLERANCES UNLESS OTHERWISE NOTED | DRAWING NUMBER AOK-301-6 | | INSTITUTE FOR ASTRONOMY 2680 WOODLAWN DR. HONOLULU, HI 96822 |
| NEXT ASSY | X.X ±0.02 | DATE: 08/21/01 | NAME: AO-SPOOL FEA VERSION | |
| N/A | X.XX ±0.005 | DESIGN: VERN S | INSTRUMENT: TELESCOPE: TELESCOPE | |
| | X.XXX ±0.001 | JOS #: JOS_NO | SIZE: B | REVISION DATE: 10/24/01 |
| | ∠ ±0.5° | MFG: | SCALE: 1:4 | SHEET NO. 6 OF 10 |